MANIPAL INSTITUTE OF TECHNOLOGY
MANIPAL
(A constituent unit of MAHE, Manipal)

Department of Chemistry

B. Tech. I Sem 2025

CHM 1071 ENGG. CHEMISTRY, END SEM EXAM SCHEME

Date: 21-11-2025

1(A)	i) Explain the determination of emf of galvanic cell by Poggendroff's compensation method. ii) Write the construction of the following. a) Calomel electrode b) Lithium-Ion battery	Marks 4
Answer	i) In this method, emf of a test cell is opposed by the impressed emf from an external source of emf, and the measurement is made when there is no net flow of current in the circuit. 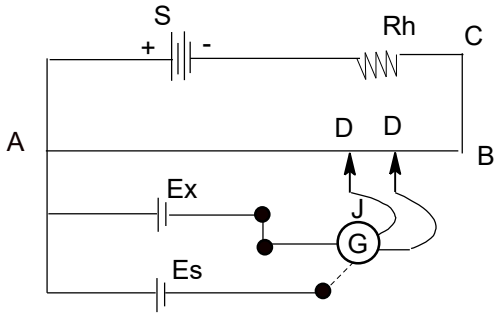 The emf of the unknown cell E_x is proportional to the length AD. • $E_x \ \alpha \ AD$ The length AD^1 is measured. The emf of the standard cell E_s is proportional to the length AD^1. • $E_s \ \alpha \ AD^1$ • $\frac{E_x}{E_s} = \frac{AD}{AD^1}$ • $E_x = \frac{AD \times E_s}{AD^1}$	½ ½ 1

	ii) a) It consists of a tube, in the bottom of which is a layer of mercury, over which is placed a paste of mercury and mercurous chloride. The remaining portion of the tube is filled with a normal or decinormal or saturated KCl solution. A platinum wire sealed and fixed at one end of a tube is dipped in the mercury and mercurous chloride paste is used for making an electrical contact. b) Cathode: Lithiated metal oxides (metal oxide in which lithium ion is intercalated) Anode: made up of graphite, into which lithium ion is intercalated Separators: polyolefin's (PP/PE/PP or just PE) using 3- to 8- μm layers with 50% porosity. Electrolyte: 1-molar solution of a lithium salt in an organic solvent.	1 1
1(B)	i) Describe the origin of single electrode potential. Write two functions of salt bridge. ii) How does the metal ion concentration affect the nature of electroplating? Write the reactions involved in electroless plating of copper.	4
Answer	i) When a metal is placed in the solution of its own salt, dissolution of the metal can occur where metal ions move into solution leaving behind electrons on the electrode or deposition occurs where metal deposit on the electrode making the electrode electron poor. A difference of potential is consequently set-up between the metal and the solution by the formation of a electrical double layer called as the Helmholtz double layer. Any two points from below • It provides electrical contact between the two electrolyte solutions of a cell • It minimizes liquid junction potential in galvanic cells containing two electrolytic solutions in contact • It maintains the electrical neutrality of the two half cells ii) If the concentration of metal ion is low the crystal size will be smaller and a fine adherent film may be coated $Cu^{2+} + 2e^- \longrightarrow Cu\ (S)$ $2HCHO + 4OH^- \longrightarrow 2HCOO^- + 2H_2O + H_2 + 2e^-$	1 1 1 ½ ½

1(C)	A glass electrode dipped in a solution of pH =4 shows an emf of 0.2066V with SCE at 298 K. Dipped in a solution of unknown pH at the same temperature in contact with SCE shows an emf of 0.1076 V. Calculate the pH of the solution, if E_{SCE} = 0.2412 V.	2
Answer	$E_{cell}=E^o_g-0.0592pH-0.2412$ $0.2066= E^o_g-0.0592\times4-0.2412$ $E^o_g=0.6846V$ pH=(0.6846-0.1076-0.2412)/0.0592 pH=5.6	1 1
2(A)	i)The absorbance of a 0.5 M copper sulfate solution was found to be 0.3500 at 440 nm. Calculate the extinction coefficient if the thickness of the cuvette is 1.00 cm. ii)With a model graph, describe the conductometric titration of CH_3COOH with NH_4OH.	4
Answer	i) A=εbc ε = 0.3500/1x0.5 = 0.7 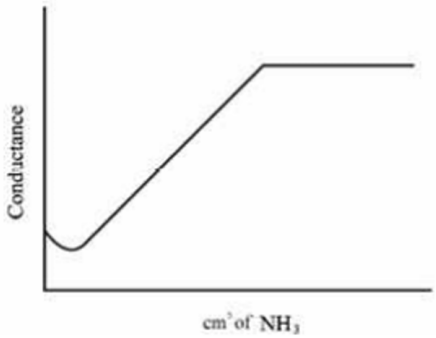 Acetic acid is a weak acid, it dissociates partially into H^+ and CH_3COO^- ions and hence number of ions are less in the solution as a result initially low conductance value is observed. When weak base is added dropwise initially slight decrease in conductance value is observed due to the common ion effect. With further addition of NH_4OH dropwise, gradual increase in conductance value is observed. This is due to the formation of conducting CH_3COONH_4 salt. After the equivalence point an excess of NH_4OH in solution has little effect on the conductance value as its dissociation is suppressed by ammonium salt in the solution.	½ ½ 1 1 1
2(B)	i)Explain Calgon conditioning with a suitable reaction. ii)Write the principle of a) reverse osmosis b) electrodialysis	4
Answer	i) Adding calgon [sodium hexa meta phosphate] to boiler water. It prevents scale and sludge formation by forming soluble complex compound with $CaSO_4$. $2CaSO_4 +[Na_4P_6O_{18}]^{2-}$-------->$[Ca_2P_6O_{18}]^{2-} +2Na_2SO_4$	1 1

	ii) a) If a hydrostatic pressure in excess of osmotic pressure is applied on theconcentrated side, the solvent moves from concentrated side to dilute side across the membrane. b) Electro dialysis is a method in which the ions (of the salts present) are pulled out of the salt water by passing direct current, using electrodes and thin rigid plastic membrane pair.	1 1
2(C)	What is priming? Write two methods of avoiding it.	2
Answer	When a boiler is steaming (i.e., producing steam) rapidly, some particles of the liquid water are carried along-with steam. This process of 'wet steam' formation is called Priming. It can be avoided by (i)fitting mechanical steam purifiers;(ii)avoiding rapid change in steaming rate(iii) Maintaining low water levels in boilers and;(iv) efficient softening and filtration of the boiler-feed water.	1 1
3(A)	i) Explain the type of corrosion occurring in the following cases in an oxidizing environment of neutral medium. a) A small portion of tin coat peeled off from the surface of iron. b) A lead chamber fastened with zinc screws ii) Explain in detail the corrosion control by anodic inhibitors.	4
Answer	i) a) Tin is cathodic to iron. Pitting corrosion is characterized by a small anodic area and large cathodic area, resulting in accelerated corrosion at the anodic area. Thus iron gets corroded with respect to tin. b) This leads to galvanic corrosion. Zinc has lower reduction potential than lead and hence zinc corrodes when in contact with lead. ii) Substances used to stop the anodic reaction are called anodic inhibitors. They form insoluble compounds with the metal ions formed at the anodic part due to its initial corrosion. These insoluble compounds form a protective film on the anode surface, which isolates the anode from the electrolyte medium and stops corrosion. The anions such as chromate, tungstate, molybdate, and phosphate are used to arrest anodic processes.	1 1 1 1
3(B)	Explain caustic embrittlement of steel with suitable reactions. List any two of its preventive methods.	
Answer	Water fed into boilers may contain free alkali. Water softened by lime soda process contains sodium carbonate. Under high temperature and pressure prevailing within boilers, sodium carbonate hydrolyses to sodium hydroxide and carbon dioxide. Na_2CO_3 (aq) + H_2O (l) → 2NaOH + CO_2(g)	½

	Thus water inside the boiler becomes a very dilute NaOH solution. Local stresses exist in metal sheets of the boiler under rivets. Minute cracks develop on the metal sheets when the stress is relieved. Dilute NaOH solution flows into these minute hairline cracks. Water evaporates by the heat of the metal, depositing sodium hydroxide within the cracks. Freshwater flows into them and evaporates again depositing more NaOH. The concentration of NaOH increases in these cracks due to the repetition of this process. NaOH concentration cell forms between the stressed and unstressed parts of the metal. The sodium hydroxide attacks the metal and forms sodium ferroate (Na_2FeO_2) which further undergoes hydrolysis regenerating NaOH. $3Na_2FeO_2 + 4H_2O \rightarrow 6NaOH + Fe_3O_4 + H_2$ $6Na_2FeO_2 + 6H_2O + O_2 \rightarrow 12NaOH + 2Fe_2O_4$ Any 2 points from the following: • Na_2SO_4, tannin, or lignin is added to the water. These substances deposit within the cracks and prevent the infiltration and accumulation of NaOH. • The boiler can be constructed by welding the sheets to avoid local stresses. • Caustic embrittlement is minimized by using demineralized water that does not contain NaOH and Na_2CO_3.	½ ½ ½ ½ ½ ½+½
3(C)	Differentiate i) Galvanic and electrochemical series ii) Dry and wet corrosion	2
Answer	i) Any two differences ii) Any two differences	1 1
4(A)	i) Differentiate between the following (Any two points each) - a) Thermotropic and lyotropic liquid crystal. b) Matrix and dispersed phase. ii) Explain the chemical vapour deposition process of thin film fabrication with suitable example.	4
Answer	i) a) Thermotropic and lyotropic liquid crystal (Any two points) b) Matrix and dispersed phase (Any two points) ii) *Process principles and deposition mechanism:* CVD process involves the following key steps: 1. Generation of active gaseous reactant species 2. Transport of these gaseous species into the reaction chamber. 3. Gaseous reactants undergo gas phase reactions forming intermediate species. At a high temperature, homogeneous gas phase reaction can	1 1 1

occur where the intermediate species undergo subsequent decomposition and/or chemical reaction.

4. The chemical reaction produces the deposit and by-product species.

5. The deposits will diffuse along the heated substrate surface forming the crystallization center and growth of the film takes place.

6. Gaseous by-products are removed from the boundary layer through diffusion or convection.

Examples: Titanium tetrabromide is evaporated and the gaseous TiBr4 is mixed with hydrogen. The mixture is then passed over a substrate heated to about 1300 °C, such as silica or alumina. The metal halide undergoes reaction with hydrogen to form a thin film of titanium metal

$TiBr_4(g) + 2H_2(g) \longrightarrow Ti(s) + 4HBr(g)$

OR

Films of silicon are formed by decomposing SiCl4 in the presence of H_2 at 1200 °C. $SiCl_4(g) + 2H_2(g) \longrightarrow Si(s) + 4HCl(g)$ — 1

4(B) — 4

i) Polyethylene sample has the following composition.

Degree of polymerization	400	300	200	100
% of composition	10	20	30	40

Calculate the number average molecular weight, weight average molecular weight and PDI of the given polymer sample.

ii) Why polyvinyl chloride (PVC) has higher strength than Polyethylene?

Answer

i)

Number average MW = 5600 g/mol — 1

Weight average MW = 7000 g/mol — 1

PDI = 1.25 — 1

ii) Polyethylene molecule is simple and uniform, hence movement of molecule one over the other is possible, i.e., slipping power is high. Hence it has lesser strength. But in case of polyvinyl chloride (PVC), bulky chlorine atoms are present along the chain length hence, movement is — 1

	restricted. Polyvinyl chloride (PVC) has higher strength than polyethylene (PE) because of structural and intermolecular differences.	
4(C)	Explain the sol-gel method for the preparation of nanomaterials.	
Answer	1. Preparation of a precursor solution: The desired colloidal particles are dispersed in a liquid to form a sol 2. Deposition of the sol onto a substrate: The sol solution is coated on a substrate by spraying, dipping or spinning 3. Formation of gel: The particles in the solid state are polymerized either by heating the sol at a low temperature or allowing it to stand for a certain duration to form a gel. 4. Drying process: Removal of the remaining liquid (solvent) phase through drying process, which leads to significant amount of shrinkage and densification 5. Heat Treatment: A thermal treatment, or firing process, to favor further poly-condensation reaction and enhance mechanical properties, structural stability of the gel.	2
5(A)	i) Define concentration polarization. ii) The EMF of a cell which is independent of the concentration of the KCl solution Pb / $PbCl_2$(s) // KCl soln / Hg_2Cl_2 / Hg is 0.855 V at 298 K and the temperature coefficient is -3.38 X 10^{-4} VK^{-1}. Calculate the change in free energy, enthalpy and entropy changes at 298 K.	4
Answer	i) An electrochemical reaction occurs only at the surface of the two electrodes. Reactant concentration decreases in the electrolyte adjacent to the electrode surface. The reactant species are transported to the electrode surface by processes like diffusion, migration and convection from the bulk of the solution. When the rate of transport is insufficient to match the rate of electrode reaction, current flowing through the cell drops. A higher potential than the theoretical value is required to maintain the current at the necessary level. This phenomenon is called concentration polarization ii) ΔG = -165.015 KJ or -165015 J ΔH = 184.454 KJ or -184454 J ΔS = -65.234 J/K	1 1 1 1
5(B)	i) Discuss the particle reinforced composites. ii) Define hydrogen bonding. Justify *p* – nitrophenol has higher boiling point than *o* – nitrophenol.	4
Answer	**i)** Large particle and dispersion –strengthened composites fall within the category of particle reinforced composites.	1

	For most of the large particle reinforced composites, the particulate phase is harder and stiffer than the matrix. In essence, the matrix transfers some of the applied stress to the particles, which bear the friction of the load. For dispersion-strengthened composites, particles usually are much smaller. In this the matrix bears the major portion of an applied load, the small dispersed particles hinder the motion of dislocations. ii) The electrostatic attraction between an H-atom covalently bonded to a highly electronegative atom X such as nitrogen, oxygen or fluorine and a lone pair of electrons on X in another molecule is called hydrogen bonding. p–nitrophenol has a higher boiling point because it forms intermolecular hydrogen bonds, whereas o–nitrophenol forms intramolecular hydrogen bonds that reduce intermolecular attraction and lower its boiling point.	1 1 1
5(C)	Give reasons for the following. i)Galvanized containers are not used to store acidic food. ii)Fe_2O_3 promotes corrosion, whereas Al_2O_3 retards corrosion.	2
Answer	i) Galvanized containers cannot be used to store acidic foodstuffs because zinc reacts with food acids forming highly toxic zinc compounds. ii) Fe_2O_3 is soluble, unstable, non-uniform, non-adherent and porous, the corrosion continues unabated since in such cases fresh metal surface is continuously exposed to the corrosion environment, and corrosion of the metal surface takes place continuously Al_2O_3 is insoluble, stable, uniform, adherent and nonporous, it acts as a protective film preventing the further corrosion of metal.	1 ½ ½